PRODUCT SPECIFICATION

TYPE

Centrifugal impeller, backward curved

MODEL

KRR71A/IR 710KR

Description

- Size - 710mm
- Material: steel, powder coated in blue
- Coatings RAL 5007. Cover type - GL
- Number of blades is seven (7)
- Single-flow
- Operation Mode - S1
- Fitting position horizontal or vertical
- Contents of delivery:
  - inlet ring with the ability to measure volumetric flow
  - screwed hub
  - clamping sleeve for a specific motor shaft
- Min./Max. permissible ambient impeller temperature (transportable/ storage) - (- 40°C … + 80°C)
- Min. Ambient Temperature - (- 20°C)
- Max. Ambient Temperature - (+ 80°C)

IMPELLER

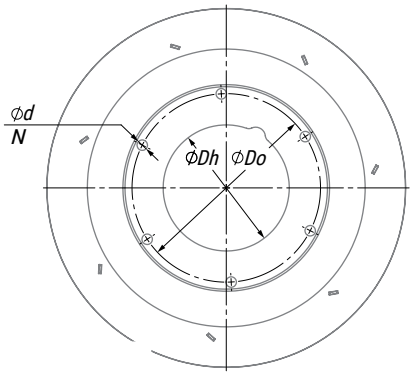

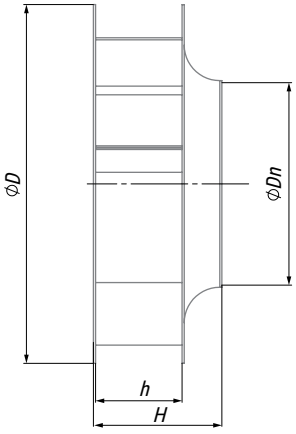

OVERALL DIMENSIONS

Model	Ø D [mm]	Ø Dn [mm]	H [mm]	h [mm]	Ø Dh [mm]	Ø Do [mm]	Ø d [mm]	N	Weight [kg]
KRR71A/SM25	811.8	457	287	196	170.3±0.1	240	11.5	8	37.7

INLET RING

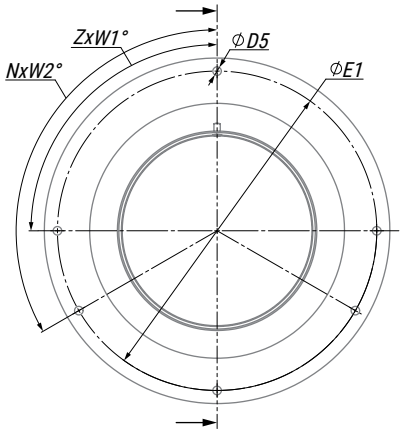

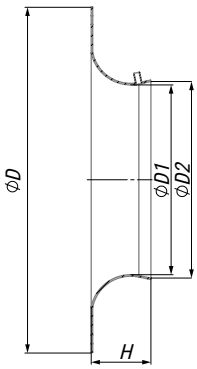

OVERALL DIMENSIONS

Model	ØD [mm]	H [mm]	ØD1 [mm]	ØD2 [mm]	ØE1 [mm]	ØD5 [mm]	ZxW1°	NxW2°	Weight [kg]
IR 710KR	704	131	428.9	443.1	670	10.5	6x90	4x90	5.9

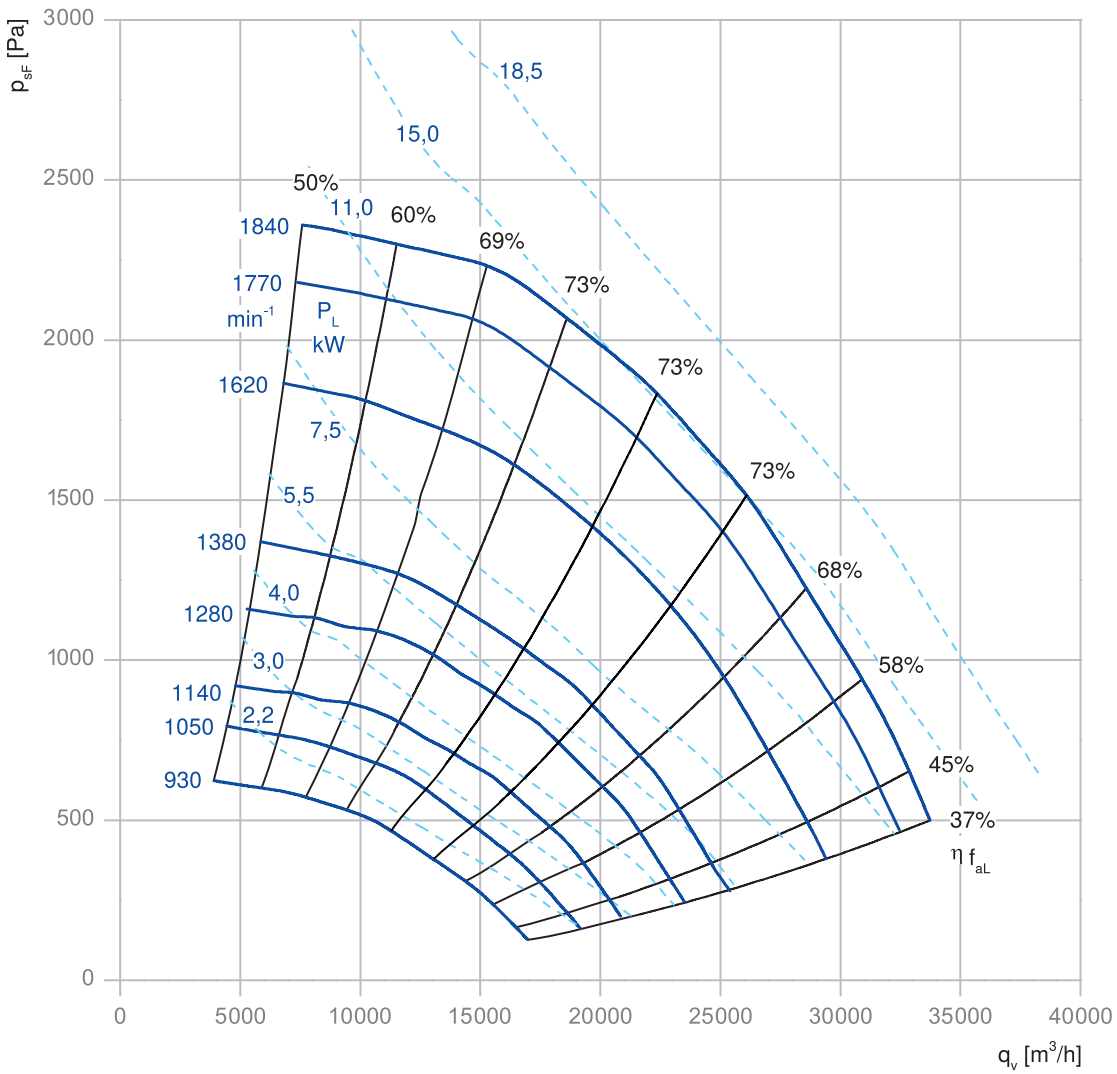
p_sF [Pa]
3000
2500
2000
1500
1000
500
0
18,5
15,0
11,0
7,5
5,5
4,0
3,0
2,2
1840
1770
1620
1380
1280
1140
1050
930
min-1
P_L
kW
50%
60%
69%
73%
73%
73%
68%
58%
45%
37%
η f_aL
0
5000
10000
15000
20000
25000
30000
35000
40000
q_v [m³/h]

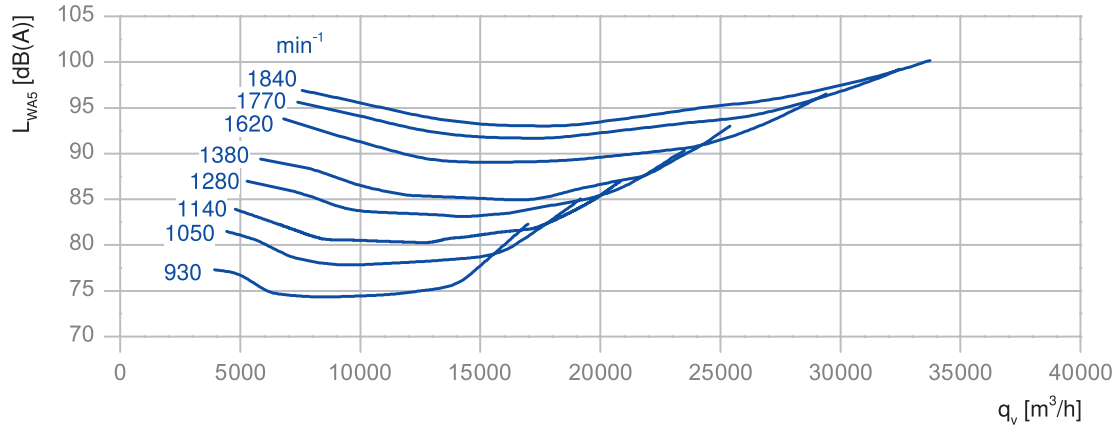
L_WA5 [dB(A)]
105
100
95
90
85
80
75
70
min-1
1840
1770
1620
1380
1280
1140
1050
930
0
5000
10000
15000
20000
25000
30000
35000
40000
q_v [m³/h]