BLAUBERG Motoren

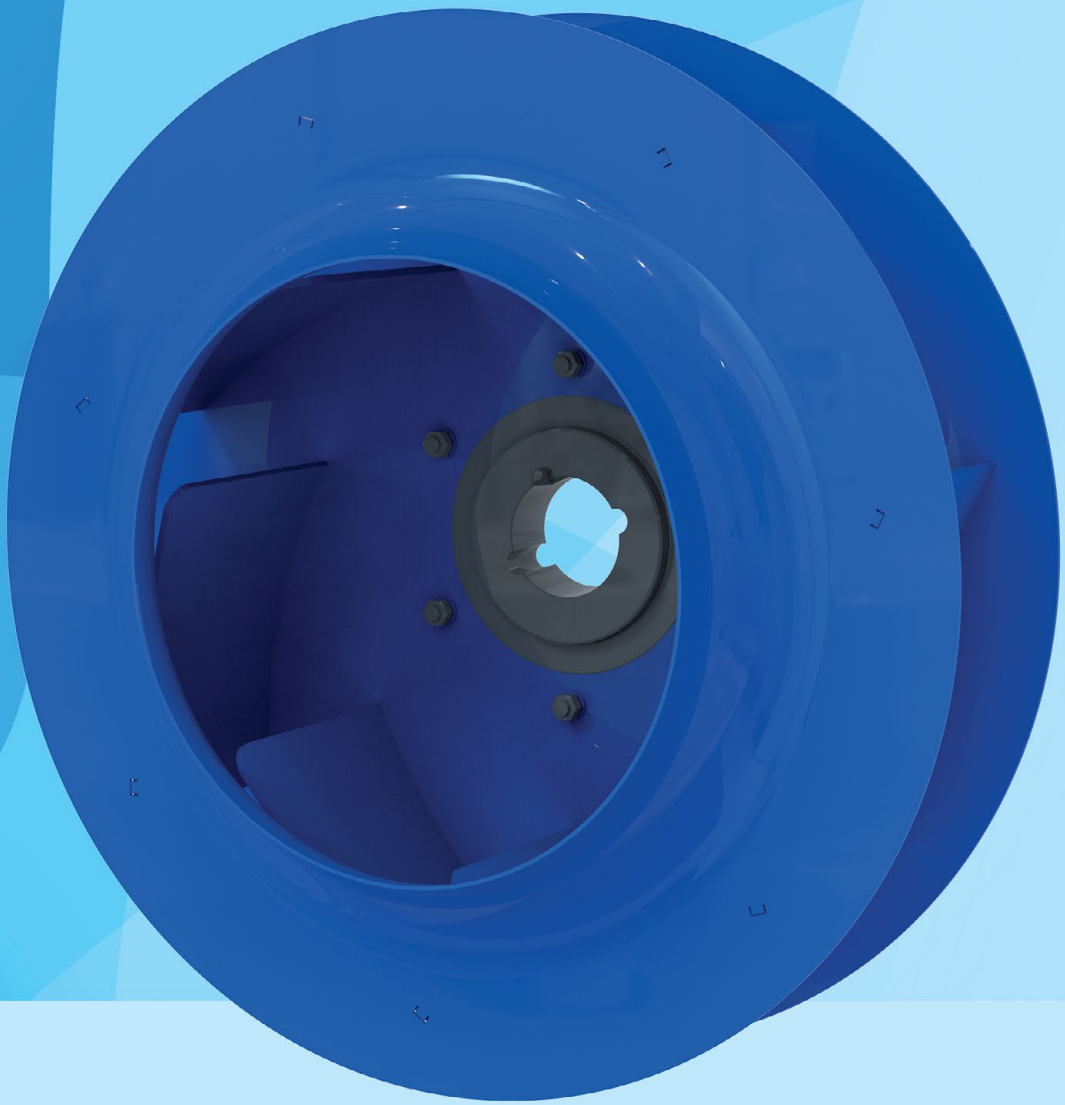

IMPELLERS
KRR SERIES

BLAUBERG Motoren

IMPELLERS

USE

- HVAC
- Central air conditioners
- Air handling units (AHU)
- Plug Fans
- Used as a free impeller
- The impellers are compatible with various AC/EC motors 50/60 Hz

TECHNICAL DATA

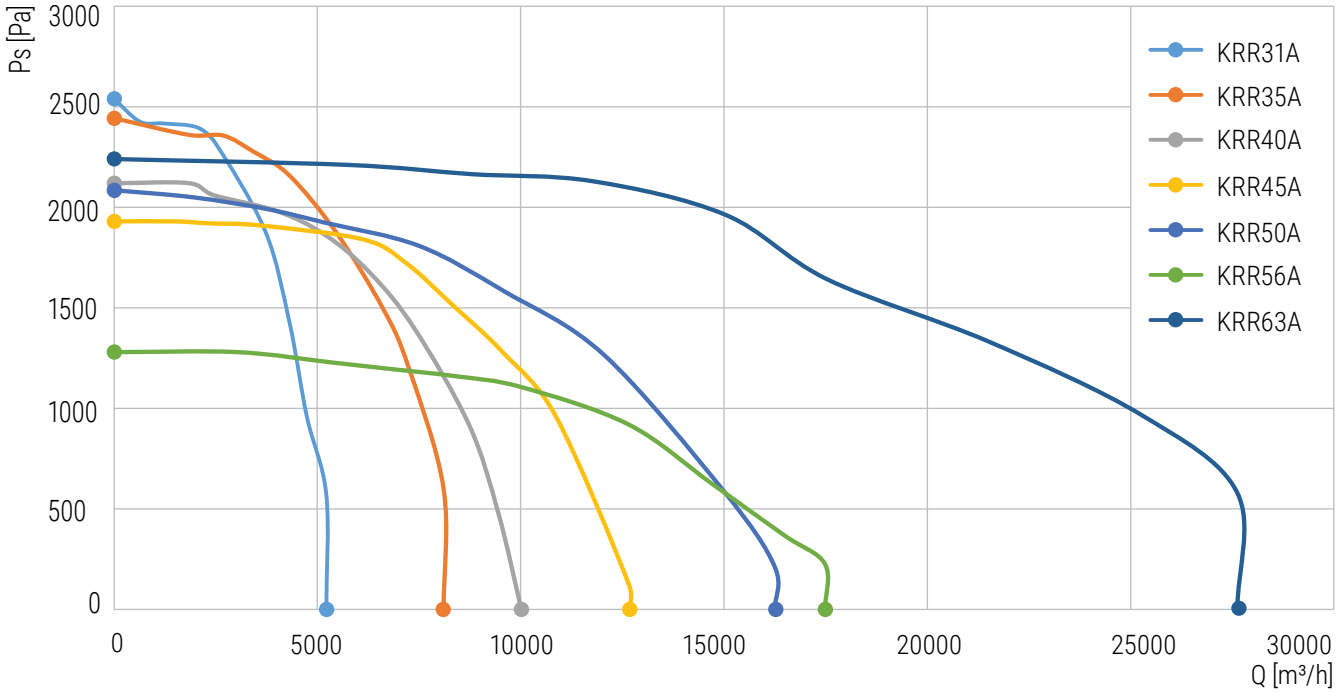

Model	Maximum power [W]	Maximum current [A]	RPM [min⁻¹]	Pressure [Pa]	Air flow [m³/h]
KRR31A/SM16-1	4.4	7.7	4260	2540	6608
KRR35A/SM16-1	4.64	7.2	3685	2440	8300
KRR40A/SM16-1	5.62	10.1	3040	2120	9944
KRR45A/SM20	5.51	15.1	2710	1930	12345
KRR50A/SM20	8.42	26	2500	2085	16200
KRR56A/SM20	4.92	21.3	1725	1280	17323
KRR63A/SM25	13.0	39.4	2060	2240	27742

- Include 7 diameters with a fixed blade width from 310 to 630 mm
- Material: steel, powder coated in blue
- Seal modification
- Single-flow
- Equipped with a hub and an inlet ring with a measurement unit for measuring volume flow

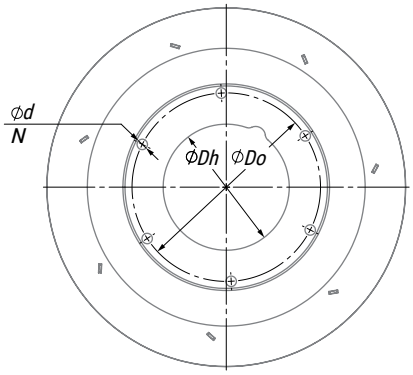

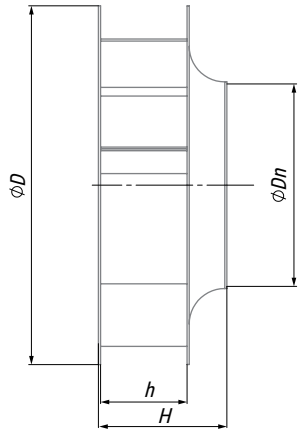

OVERALL DIMENSIONS

Model	Ø D [mm]	Ø Dn [mm]	H [mm]	h [mm]	Ø Dh [mm]	Ø Do [mm]	Ø d [mm]	N	Weight [kg]
KRR31A/SM16-1	361	203	128	87					3.64
KRR35A/SM16-1	406.2	228	144	98	110.3±0.1	150	7.5		5.42
KRR40A/SM16-1	457	257	163	111				6	5.84
KRR45A/SM20	515	290	183	125					11.1
KRR50A/SM20	580.5	326	206	140	140.3±0.1	190	9.5		15.6
KRR56A/SM20	644.2	363	229	156					19.2
KRR63A/SM25	721.8	406	256	174	170.3±0.1	240	11.5	8	29.7

INLET RINGS

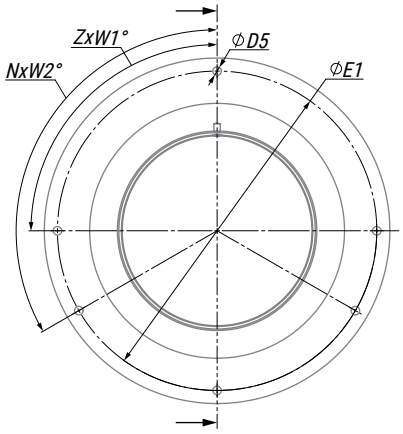

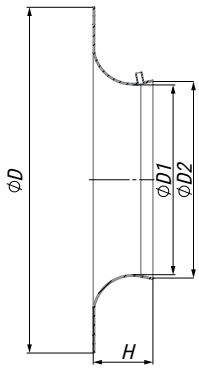

OVERALL DIMENSIONS

Model	ØD [mm]	H [mm]	ØD1 [mm]	ØD2 [mm]	ØE1 [mm]	ØD5 [mm]	ZxW1°	NxW2°	Weight [kg]
IR 310KR	343	59	188.4	195.1	317				1.06
IR 355KR	378	66	213.1	220.1	352				1.28
IR 400KR	418	74	237.8	248.1	392	8.5	4x90	3x120	2.1
IR 450KR	464	83	270.7	281.1	438				2.6
IR 500KR	514	94	304.3	316.1	488				3.2
IR 560KR	564	104	339.7	351.1	538				3.8
IR 630KR	634	117	381.8	393.1	600	10.5	6x90	4x90	4.8

BLAUBERG Motoren
PART OF BLAUBERG GROUP

Blauberg Group
Aidenbachstr. 52
D-81379 Munich

Tel.: +49 (0)89 231 66 620
Fax: +49 (0)89 780 69 521
sales@blauberg-motoren.com

blauberg-motoren.com

06/2019