Ø 120 MM, FORWARD CURVED

AC CENTRIFUGAL FAN

Features

- **Impeller material:** galvanized steel
- **Direction of rotation:** clockwise, seen on rotor
- **Type of protection:** IP44
- **Insulation class:** B
- **Mode of operation:** continuous operation (S1)
- **Bearing:** ball bearings
- **Motor protection:** self-resetting TOP wired internally

Technical data

Model	Perform. curve	Nominal voltage [VAC]	Frequency [Hz]	Speed [RPM]	Power input max [W]	Current max [A]	Sound pres. level [dBA]	Perm. amb. temp. [°C]	Capacitor [µF/VDB]	Electrical connection
BL-F120A-2E-A01-01	I	230	50	2900	67	0.29	60	−25 ... +50	1.5/450	A
	II	230	60	3400	84	0.37	63	−25 ... +50	1.5/450	A

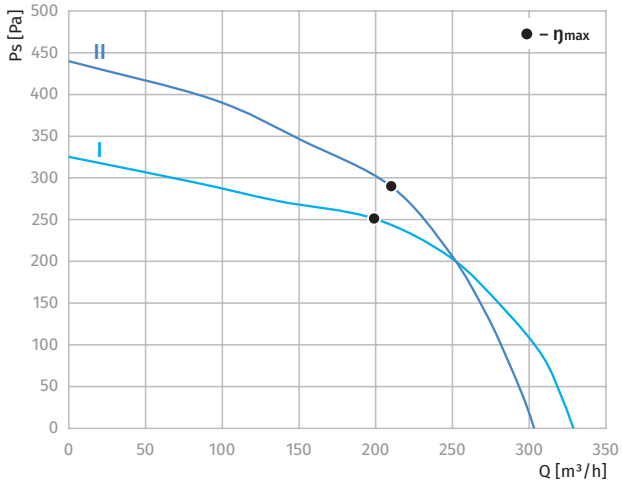
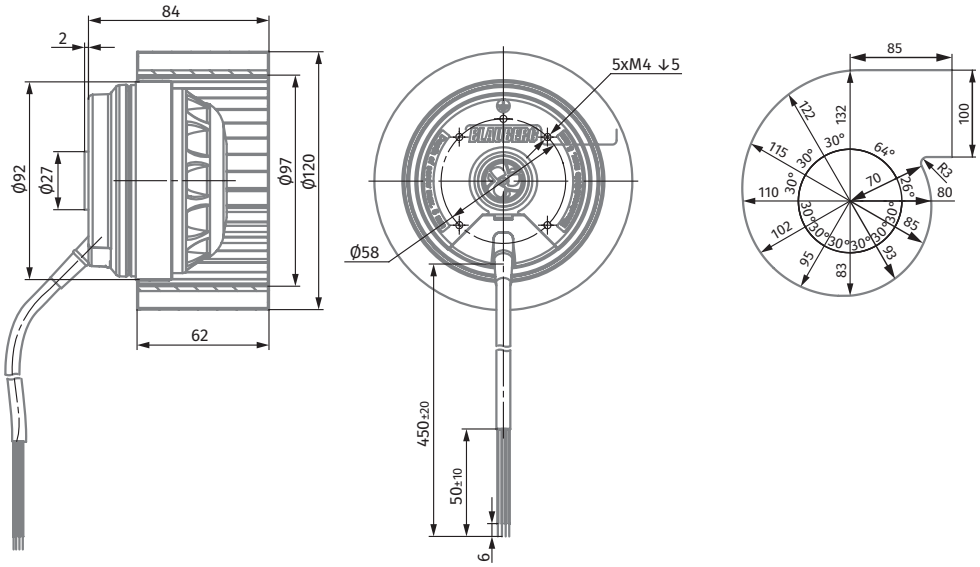
Overall dimensions