Ø 108 mm, FORWARD CURVED

EC CENTRIFUGAL FAN

Features

- **Speed Control:** 0 ~ 10V DC/PWM
- **Impeller material:** galvanized steel
- **Direction of rotation:** clockwise, seen on rotor
- **Type of protection:** IP55
- **Insulation class:** B
- **Mode of operation:** continuous operation (S1)
- **Bearing:** ball bearings
- **Motor protection:** self-resetting TOP wired internally

Technical data

Model	Perform. curve	Nominal voltage [VAC]	Frequency [Hz]	Speed [RPM]	Power input max [W]	Current max [A]	Sound pres. level [dB(A)]	Perm. amb. temp. [°C]	Capacitor [µF/VDB]	Electrical connection
BL-F108A-EC-00	I	230	50/60	3340	82	0.65	67	−25 ... +60	–	E

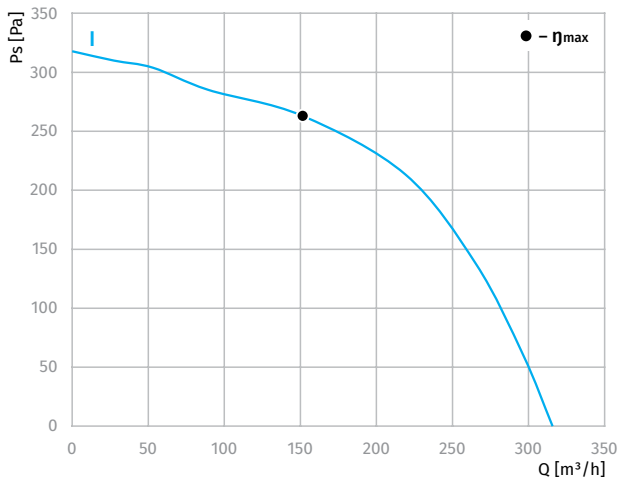
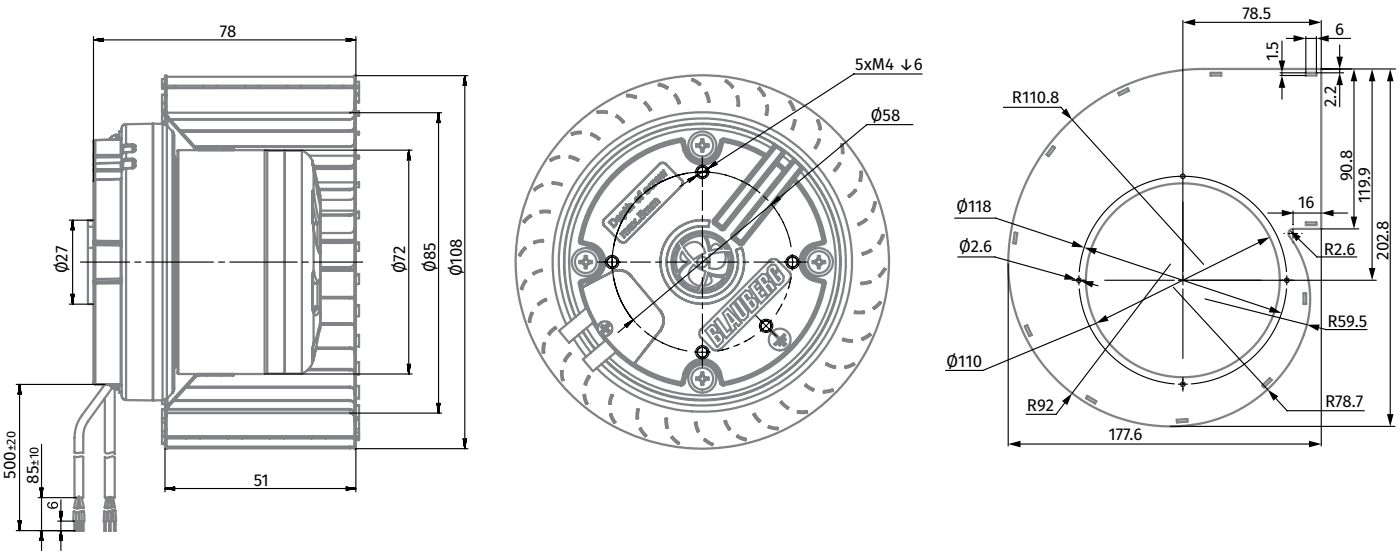
Overal Dimmensions