BLAUBERG Motoren

PRODUCT SPECIFICATION

TYPE	AC centrifugal fan, backward curved, with housing (Plug Fan)
MODEL	GL-B250A-2E-D01-01

NOMINAL DATA

Phase	-	1~	1~
Nominal Voltage	VAC	230	230
Frequency	Hz	50	60
Speed	RPM	2700	3000
Power Input	W	223	261
Current	A	0.97	1.14
Sound Pressure Level	dBA	53	45
Capacitor	µF	4.0	4.0
Capacitor Voltage	VDB	450	450
Valid For Approval/Standard		CE	CE
Min. Ambient Temperature	°C	-25	-25
Max. Ambient Temperature	°C	+50	+50

TECHNICAL FEATURES

Mass	3.95 Kg
Dimensions	250 mm
Material Of Impeller	PA plastic+30% glass fiber+galvanized steel
Material Of Housing	Sheet steel, painted grey
Number Of Blades	11
Direction Of Rotation	Clockwise, seen on rotor
Surface Of Rotor	Coated in reflex BLUE C
Type of protection	IP44
Insulation Class	B
Condensate Discharge Holes	On rotor side
Min./Max. permissible ambient motor temperature (transportable/ storage)	- 40°C ... + 80°C
Operation Mode	S1
Motor Bearing	Ball bearing
Motor Protection	Self-resetting TOP wired internally
Length Of Cable	450 mm
RoHS	All material accord with RoHS
Min./Max. Humidity	0% ... 90% RH
Motor	External rotor AC motor
Deviation Of Impeller In Axial Direction	≤0.5mm
Deviation Of Impeller In Radial Direction	≤0.5mm

PERFORMANCE CURVES

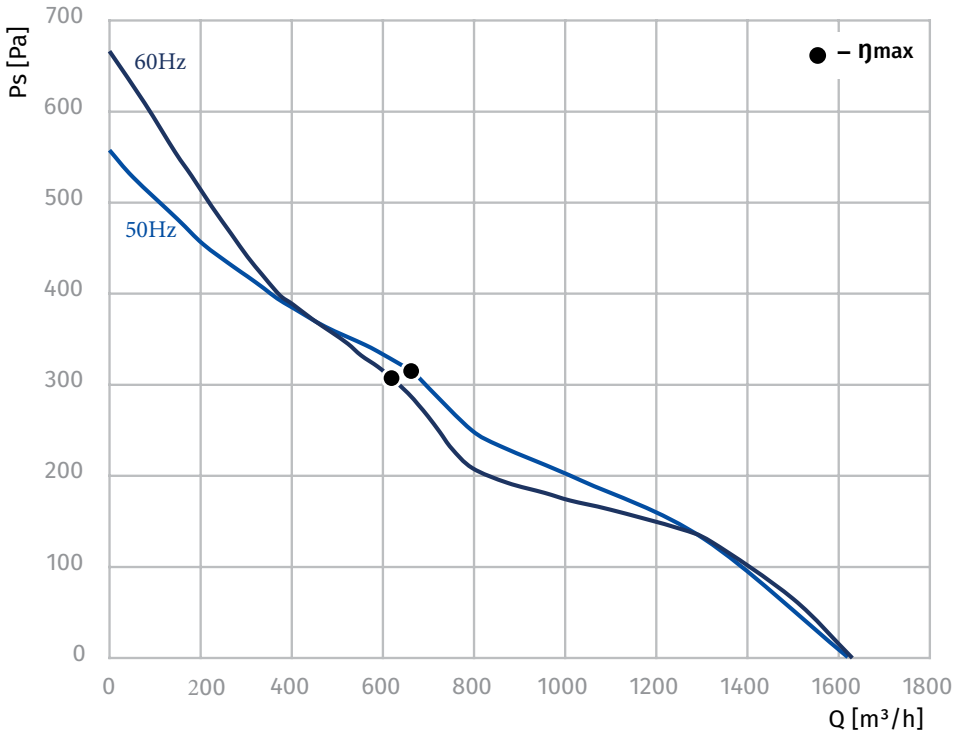

DATA ACCORDING TO ErP DIRECTIVE

Installation category	A
Efficiency category	Static
Variable speed drive	No
Specific ratio	1,00

	Actual	Request 2015
Overall efficiency η_{es}	32	44
Efficiency grade N	50	62
Power input P, W	183	
Air flow V, m^3/h	662	
Pressure increase ΔP, Pa	315	

ELECTRICAL CONNECTION DIAGRAMM

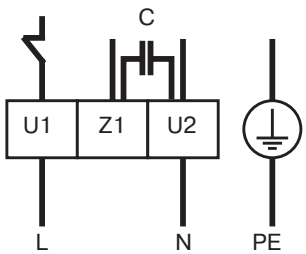

U1 Blue
U2 Black
Z1 Brown
PE Green/Yellow
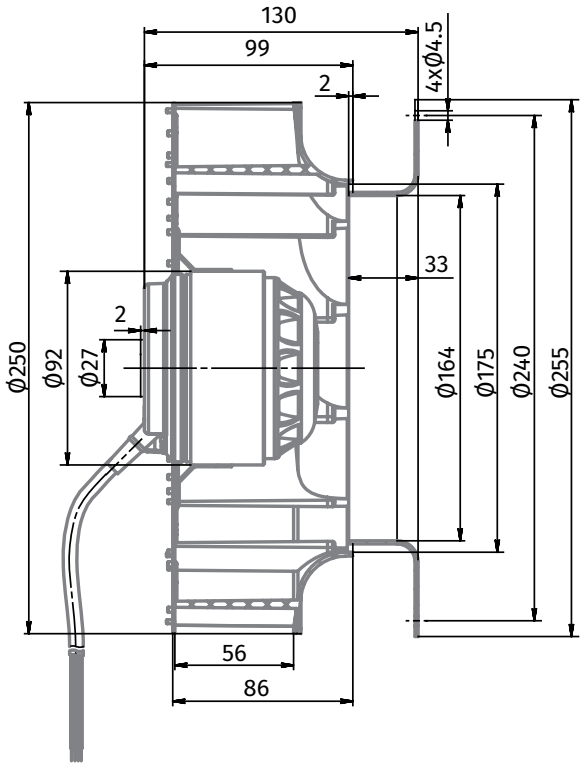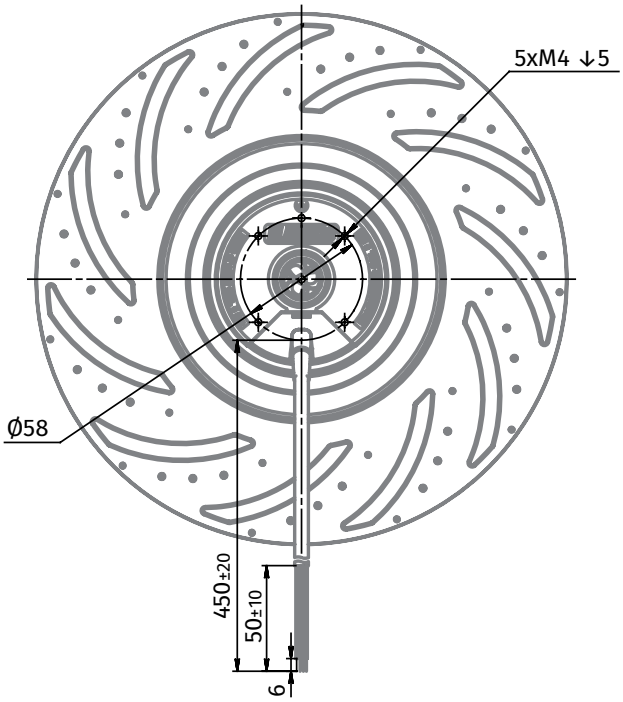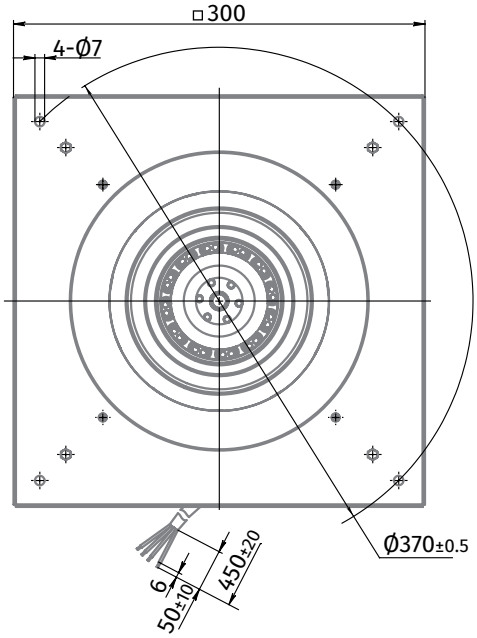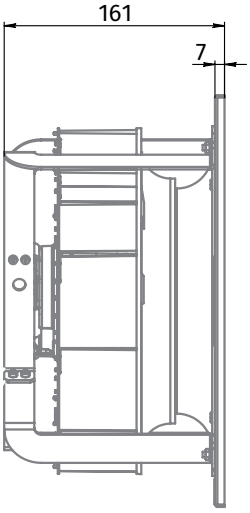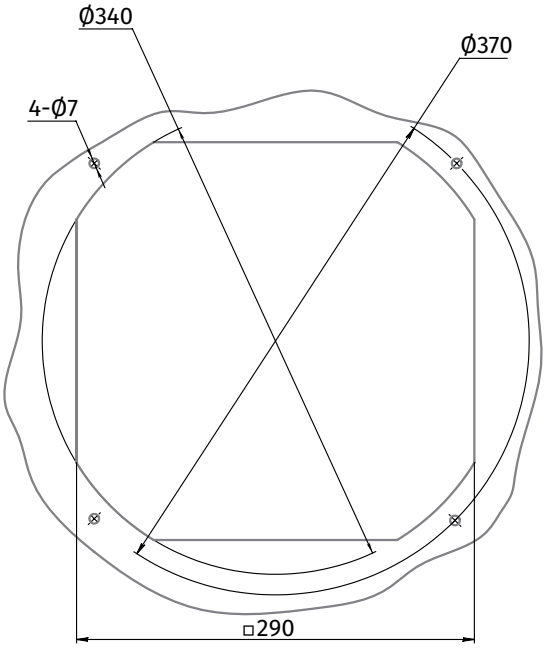
DIMENSIONS DRAWING