PRODUCT SPECIFICATION

TYPE	EC centrifugal fan, forward curved
MODEL	BL-F140B-EC-02

NOMINAL DATA

Phase	-	1~
Nominal Voltage	VAC	230
Frequency	Hz	50/60
Speed	RPM	1700
Power Input	W	66
Current	A	0.60
Sound Pressure Level	dBA	72
Valid For Approval/Standard		CE
Min. Ambient Temperature	°C	-25
Max. Ambient Temperature	°C	+60

TECHNICAL FEATURES

Mass	1 Kg
Dimensions	140 mm
Material Of Impeller	galvanized steel
Number Of Blades	38
Direction Of Rotation	Clockwise, seen on rotor
Surface Of Rotor	Coated in reflex BLUE C
Type of protection	IP55
Insulation Class	B
Condensate Discharge Holes	On rotor side
Min./Max. permissible ambient motor temperature (transportable/ storage)	- 40°C … + 80°C
Operation Mode	S1
Motor Bearing	Ball bearing
Motor Protection	Self-resetting TOP wired internally
Length Of Cable	500 mm
RoHS	All material accord with RoHS
Min./Max. Humidity	0% ... 90% RH
Motor	External rotor EC motor
Deviation Of Impeller In Axial Direction	≤0.5mm
Deviation Of Impeller In Radial Direction	≤0.5mm

PERFORMANCE CURVES

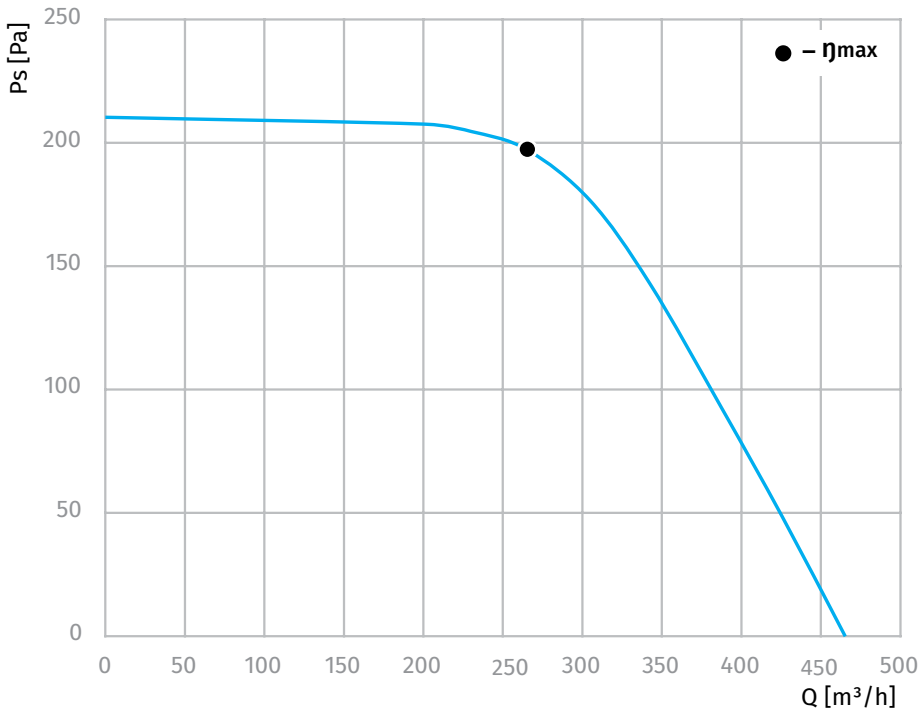

DATA ACCORDING TO ErP DIRECTIVE

Not subject to ErP regulations (P_1 < 125W).

ELECTRICAL CONNECTION DIAGRAMM

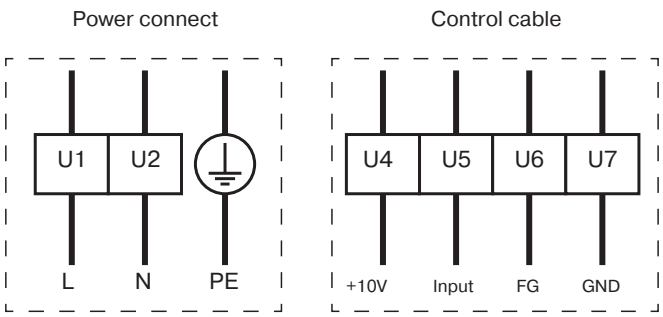

U1 Brown
U2 Blue
PE Green/Yellow
U4 Red
U5 Yellow
U6 White
U7 Blue
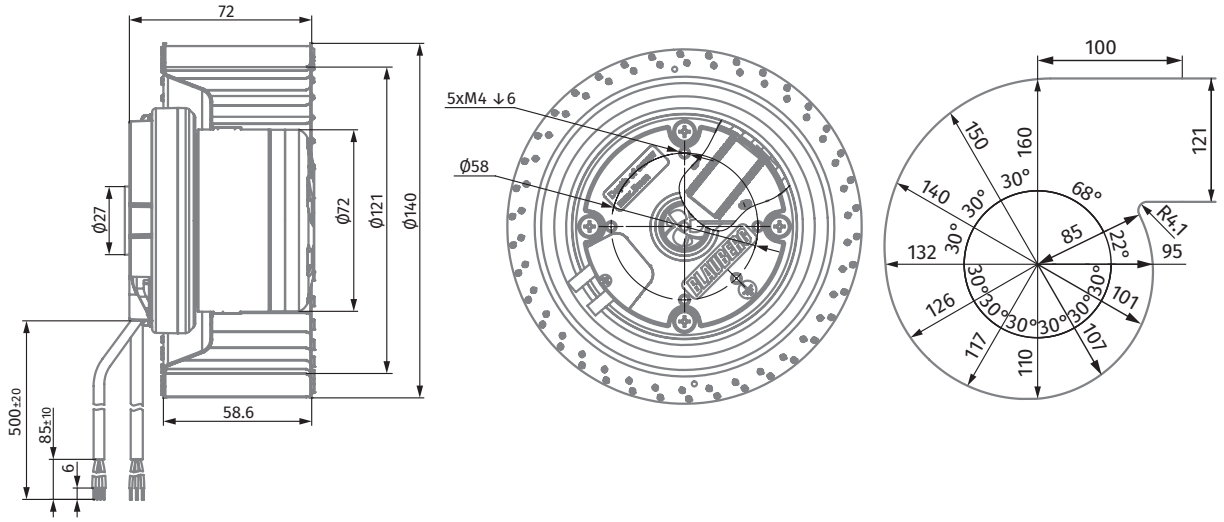
DIMENSIONS DRAWING