- Speed Control: 0 ~ 10V DC/PWM
- Impeller material: PA plastic + 20% glass fiber
- Direction of rotation: clockwise, seen on rotor
- Type of protection: IP44
- Insulation class: B
- Mode of operation: continuous operation (S1)
- Bearing: ball bearings
- Motor protection: self-resetting TOP wired internally

ErP 2015

Technical data

Type	Nominal voltage [VAC]	Frequency [Hz]	Speed [RPM]	Power input max [W]	Current max [A]	Sound pressure level [dB(A)]	Perm. amb. temperature [°C]	Electrical connection
BL-B175A-EC-00	230	50/60	3110	49	0,8	72	-25...+50	E

Overall dimensions

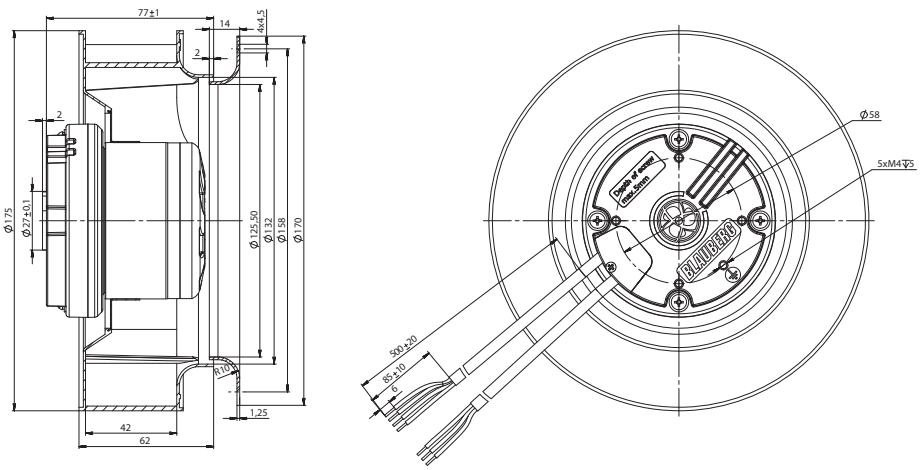
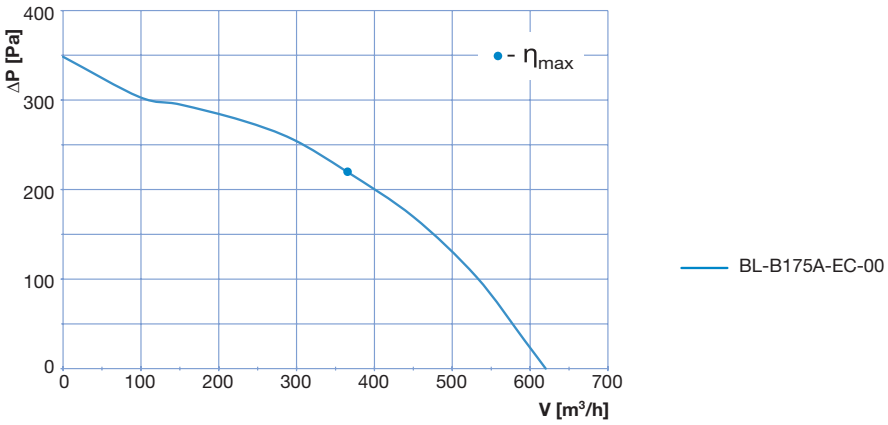
Performance curves